Model: PS3N160B2EM

Motor: BE92EC

1.General Characters

1-1	Rated Voltage	230 VAC
1-2	Frequency	50/60 Hz
1-3	Operating Voltage	184~276 VAC
1-4	Rated Speed	1950 RPM
1-5	Input Current	1.2 A
1-6	Input Power	170 W
1-7	Air Flow	404.89 CFM / 688 m^3/H
1-8	Static Pressure	3.24 inH_2O / 810 Pa
1-9	Acoustical Noise	72 dB(A)
1-10	Life Expectance	50,000 Hours(L10) At 40℃room, humidity 15%~65%RH.
1-11	Insulation Class	Class B
1-13	Motor Protection	Locked rotor protection Polarity protection Automatic restart capability
1-14	Speed Control	Control input 0~10VDC / PWM
1-15	Protection Type	IP44
1-17	Signal Output	FG (Frequency Generator)

Model: PS3N160B2EM

Motor: BE92EC

2. Mechanical Characters

2-1	Dimension	245mm X 220mm X 130mm (see dimension drawing)
2-2	Material of Impeller	Galvanized Metal Shell
2-3	Number of Blades	38
2-4	Bearing System	NMB ball bearing
2-5	Lead Wire	AC(AWG20#)，DC(AWG22 #)

3. Environmental Characters

3-1	Operating Temperature	-25℃to 60℃
3-2	Storage Temperature	-40℃to 75℃
3-3	Operating Humidity	5% to 90% RH
3-4	Storage Humidity	5% to 95% RH

Add.:No.8, Zhu Street, Suzhou Industrial Park, Suzhou City, P. R. China 215121.
Tel:0512-68581674; Fax:0512-68581574; Web:www.pbmmf.com

Model: PS3N160B2EM

Motor: BE92EC

4. Performance Curve

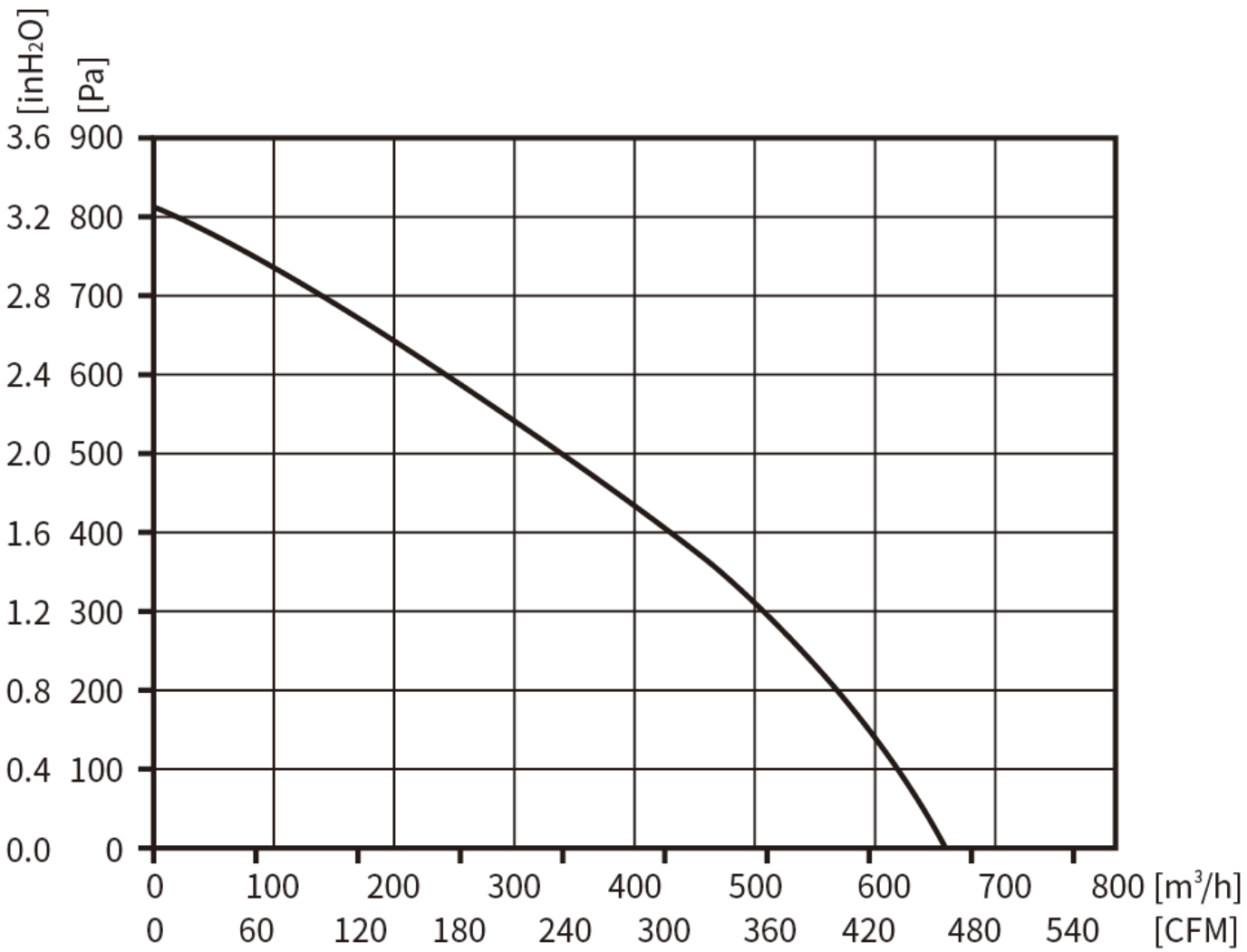

Testing Condition

Input Voltage----Operating voltage (230VAC/50Hz)
Temperature-----Room temperature
Humidity---------65%RH

Model: PS3N160B2EM

Motor: BE92EC

5. Outline Drawing

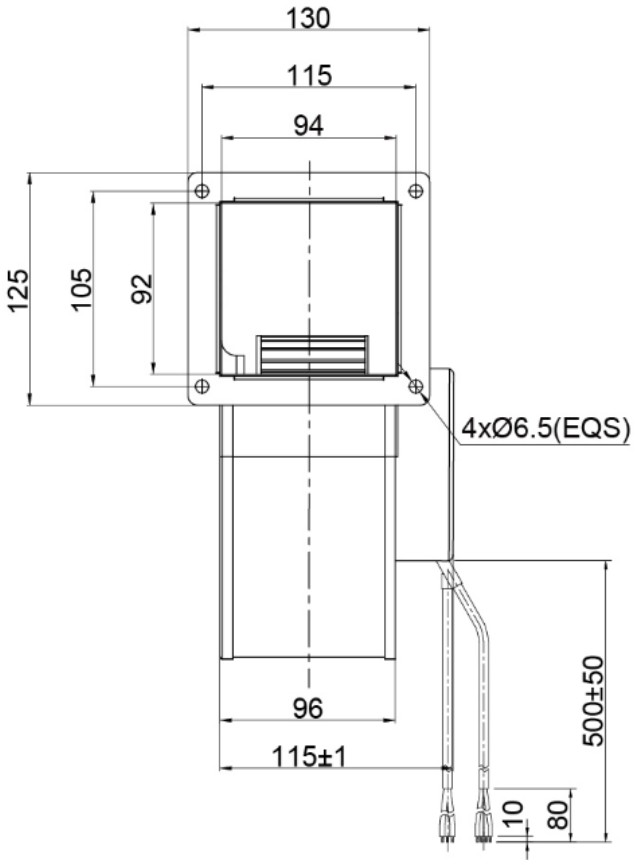

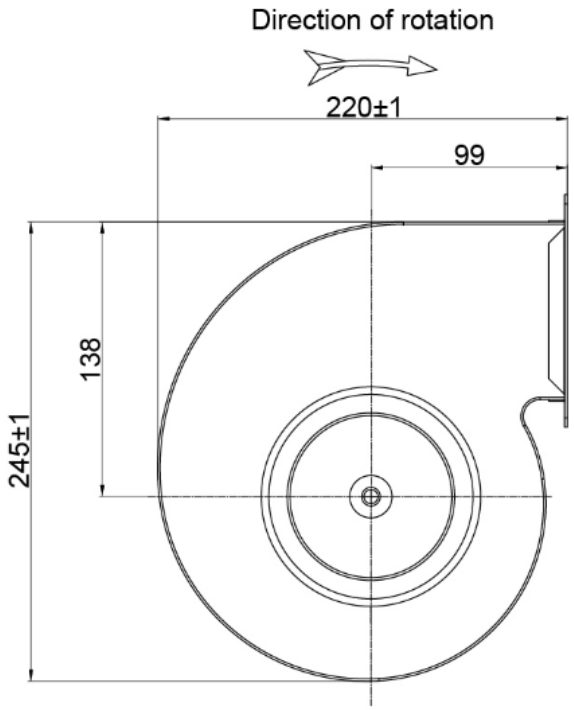

Note

1.Connection line: AC(3×AWG20#)，DC(4×AWG22#)

2.AC: Brown=Live Line，Blue=Null Line，Green & Yellow=Protecting Earthing;

3.DC: Red=Voltage Output +10VDC, Yellow=0-10VDC/PWM, White=FG, Blue=GND;